INSTALLATION & OPERATING MANUAL

MAXXUS

Massage Chair

MX 20.0

ENG

Index

Index	**2**
Safety & Maintenance	**3-5**
Description of Parts	**6**
Functions	**6-7**
Application Areas	**7**
Use	**8-12**
Assembling the Arm Rests	**13**
Setting up and Transporting the Device	**14**
Exploded Drawing	**15**
Spare Parts List	**16**
Warranty	**18**
Service Contract	**19**

© 2019 MAXXUS Group GmbH & Co. KG
All rights reserved / All rights reserved

This publication may not be reproduced, stored in a retrieval system, or transmitted in whole or in part, in any form or by any means, electronic, mechanical, photocopying, recording, or otherwise without the prior written permission of Maxxus Group GmbH & Co. KG.

Errors, colour and technical modification subject to change, reproduction as well as electronic duplication only with written permission of MAXX-US Group GmbH & Co. KG.

1. Important Safety Instructions ⚠

- Keep children away from all moving parts of the chair.
- Connect the device to an earthed electrical socket
- Remove the electrical plug from the socket after use and before cleaning to avoid personal injury or damage to the device.
- Only use the chair as instructed in this operating instruction manual.
- Do not use any additional parts or components which are not included in this scope of delivery.
- Never use this device outside or on a balcony or terrace.
- Please read the operating instructions carefully before using the device.
- All types of use which are not described in this manual are prohibited.
- It is recommended to use the device for no longer than 20 minutes in a given session.
- Please do **not** use this device if:
  - the leather is torn or damaged.
  - any of the covers are broken or damaged
  - the heating or ventilation vent is covered up or blocked.
  - If you have consumed excessive alcohol or you are feeling sick or unwell.
- Wait for at least an hour after a big meal before using the device.
- Do not fall asleep on the chair during a massage.
- To avoid injury, do **not** turn the massage function up too high.

2. Installation Location ⚠

- Please do not use the device:
  - In rooms with high temperatures and/or in rooms with a high humidity.
  - When the room temperature varies rapidly or quickly
  - In very dusty rooms
  - In any location where there is not enough space for the necessary ventilation.

3. Personal Conditions ⚠

- If you suffer from any of the following ailments or illnesses, we advise against using this device:
  - Osteoporosis
  - Heart problems or heart disease
  - If you have a pacemaker or any other electronic medical device
  - High temperature or fever
  - Any open wounds
  - Skin diseases
  - During pregnancy or menstruation
- If your doctor has ordered you to rest, we also advise not to use this device.
- Children under the age of 14 years should not be allowed to use this chair without supervision.
- Do not use this device if your body is wet or damp

4. General Safety Instructions ⚠

- Check the electrical supply voltage before turning the device on for the first time.
- Do not remove the electrical plug from the socket with wet hands
- Keep water or any other liquids away and avoid them getting into the device
- Do not damage any cables and do not exchange any circuits on this product.
- Do not use wet or damp cloths or similar to clean electrical components like switches or electrical plugs.
- Keep away from the device during a power cut to avoid being injured when the electricity goes back on.
- Please stop using the device immediately if any kind of malfunction occurs.
- Also stop using the device if you start to feel unwell.
- If the electrical cable is damaged, remove the plug from the socket and contact the supplier or another qualified electrical technician for a replacement.
- Children must be supervised when they are near the unit.
- The device is not suitable for use by persons with diminished physical, sensory or mental abilities. It is also not suitable to be used by inexperienced or unknowledgeable persons (eg children) without supervision.

5. Service and Maintenance ⚠

- The maintenance of the device may only be carried out by qualified personnel. Please do not disassemble or try to maintain the device yourself. Exceptions are only small maintenance works or repairs under the instruction of a technician of the supplier.
- Do not forget to turn off the power to the device at the mains after use.
- Do not use the device if the electrical plug is loose in the socket.
- If the chair is not to be used for a long period of time, roll up the cable and store it in a dry and dust-free place.
- Do not expose the device to high temperatures or long periods of direct sunlight.
- If the electrical cable is damaged, remove the plug from the socket and contact the supplier or another qualified electrical technician for a replacement
- Please clean the device with a dry cloth. Do not ever use thinner, mineral spirits, or alcohol for cleaning.
- All mechanical components of the chair are designed so that no special maintenance is required.
- Avoid contact with sharp objects with the chair.
- Please do not push or pull the chair over uneven ground. The chair must always be lifted to be transported.
- Please use the device with enough time intervals between each application. Do not have the device in constant use..

6. Commonly Alleged Malfunctions ⚠

- It is normal for the electronic motors to make buzzing noises during operation.
- If the control unit does not operate, please check first if the electrical plug is correctly plugged into the socket and it is turned on at the mains.
- The device will switch off automatically when the set program has come to an end.
- If the device runs too long, the chair temperature protection system will switch off automatically.
- If the device switches off automatically, it should be possible to switch it on again for use after approximately 30 minutes.

Description of Parts

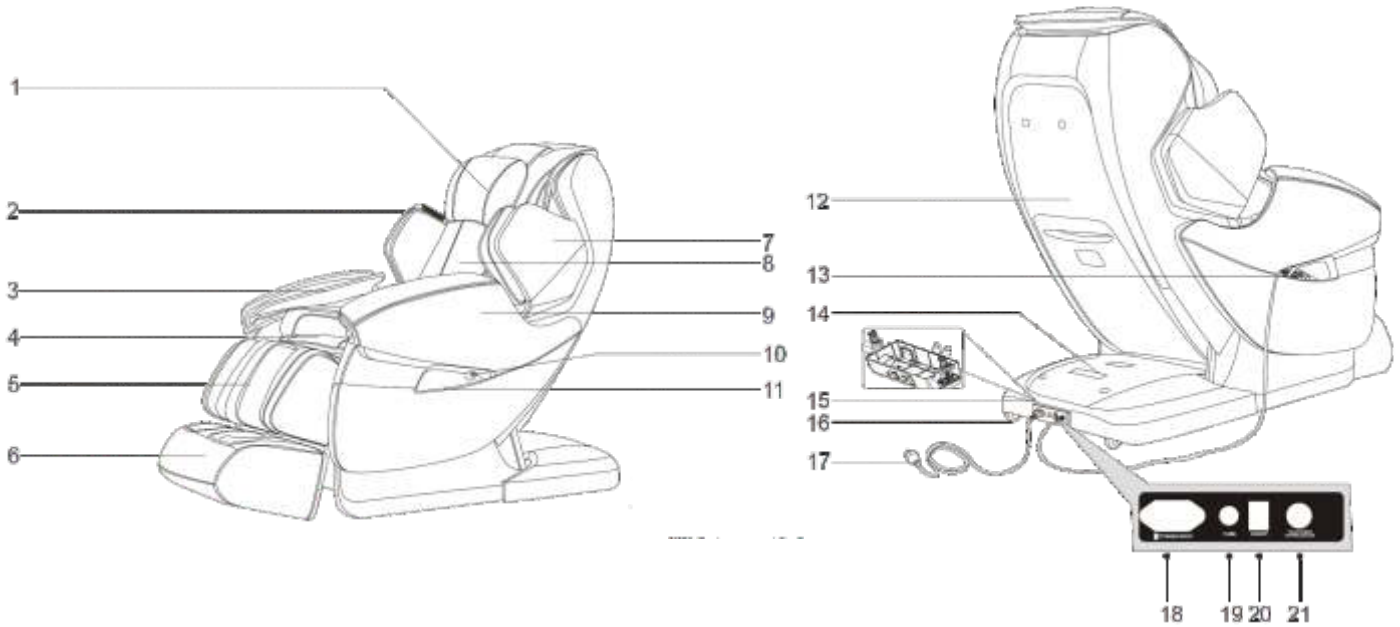

1. Head / Neck rest cushions
2. Negative oxygen ions
3. Air cushion (lower arm)
4. Seat cushion
5. Air cushion (calves)
6. Foot rest
7. Air cushion (upper arm, shoulder)
8. Back rest cushion
9. Arm rest
10. Connection (jack)
11. Pocket for remote control
12. Rear cover
13. Remote control
14. Cover (lower)
15. Safety switch
16. Transport rollers
17. Adapter plug
18. Mains connection
19. Fuse
20. Mains switch
21. Remote control connection

Functions

1. The armchair is equipped with intelligent, mechanical 3D “hands”. These units can move in all directions to make the massage as natural and as lifelike as possible

2. There are sensors in the shoulder area which automatically detect the contours of the body and massage points. With this the necessary micro-adjustments of the massage hands are made to achieve the best results.

3. The chair has many different massage programs to choose from.

4. The air pressure technology enables the hip-stretching and rotation exercises.

5. You can select from the following functions by selecting the manual massage program.

Massage Positions:
- Full body
- Partial body
- Fixed position

Massage Types:
- Shoulder massage
- Kneading massage
- Tap massage
- Knead and tap massage
- 3D Massage
- Shiatsu massage
-

Functions

6. The massage chair has air cushions to massage the arms and legs. The intensity of the massage can be selected from three levels.

7. There are also air cushions integrated for neck, shoulders, buttocks and rear thigh massage. For the neck/shoulder areas there are eight air cushions and for the buttocks/upper thigh areas there are sixteen air cushion units.

8. The heating in the back area uses carbon as an infra-red heat source.

9. The foot rest is adjustable and can be easily adapted to suit the body size of the user.

10. The foot rest and back rest are tilt-adjustable.

11. Zero-Wall and Zero-Gravity function

12. After switching off the appliance the massage hands return to their original position, so the user can comfortably remain seated.

Application Areas

There are many positive effects which can be gained from using the massage chair. In addition to general relaxation, depending on the program selected, time and intensity it is possible to achieve the following results.

1. Vitalisation of the whole body

2. Improvement of blood circulation

3. Relief of muscle tension

4. Relaxation from nerve pain

5. Reduction of muscle aching and soreness

I Switching on the Device

Insert the mains adapter plug into socket (1) located on the back of the chair.

Push the electrical plug into the socket and switch on the device at the power switch (2)

Remote Control

II Starting the Massage

1. Press the red power button to activate your massage chair. The chair will initially automatically be in the correct position.

2. To start the fully automatic body measurement, select a massage program. You can select any program to start the body measurement detection and then change the massage program again if required.

3. The determination of the sitting position / height and the resulting massage points is done automatically. Please wait until the automatic detection is completed. This can take up to a minute.

4. After the process has finished, a signal will repeatedly sound. You can now select a massage program. If you do not select an alternative program the initially selected massage program will start. before the measurement selected massage program, automatically.

5. You can adjust the shoulder massage unit manually at any time (see below).

Press the arrows on the remote control to adjust the massage hands upwards or downwards.

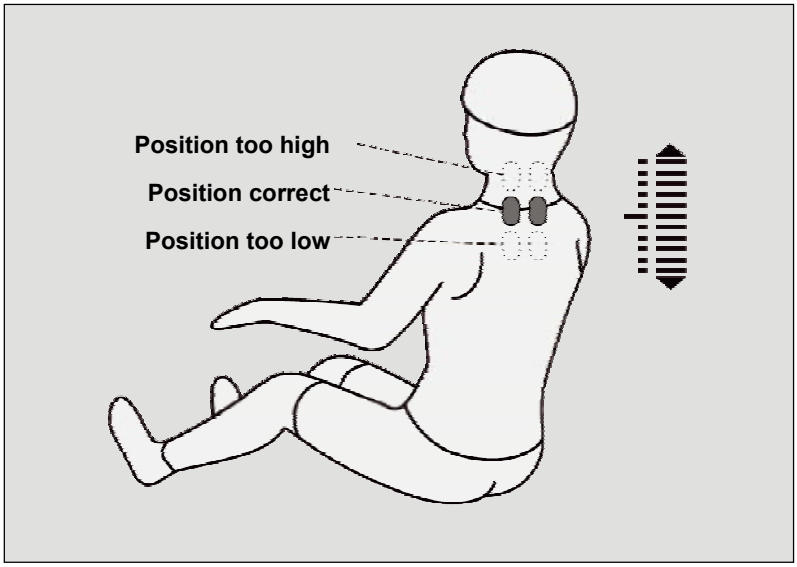

ENG

III Types of Massage

You can choose from several different automatic and manual programs. Below is a detailed guide on how to select the various programs.

Automatic Massage Types
To select the automatic massage types, press the appropriate key on the remote control as follows:

DEMO	**Demonstration:** Get to know your chair! Here the chair will automatically take your through all the massage types.	AUTO **F0**
COMFORT	**Relaxing:** Soothing full-body massage	AUTO **F1**
FATIQUE RECOVERY	**Vitalising:** Massage to improve blood circulation	AUTO **F2**
ACHE RELIEVE	**Pain relieving:** Deep massage to relax the areas of pain	AUTO **F3**
FULL AIR	**Full Body Air Cushion Massage:** Relaxes your muscles and activates the entire body.	AUTO **F5**
WAIST STRETCH	**Waist Stretch:** The hip stretching program relaxes the complete torso. Your calves will be held firmly by the air cushions and the back rest will move into a lying position so the areas of the hips, upper thighs and stomach muscles in particular are stretched.	AUTO **F6**
RELIEF STRESS	**Full Body Air Cushion Massage:** Relaxes your muscles, promotes circulation, relieves tension and activates the entire body.	AUTO **F7**
NEGATIVE OXYGEN IONS	**Negative Oxygen Ions:** By pressing the control button multiple times you can regulate and switch off the intensity of the ion output.	0 App Auto; 00 App Auto; oF App Auto
	Time Setting: The massage chair is factory set with a massage time of 20 minutes. By pressing the “TIME” button repeatedly, you can increase the time in 5-minute increments.	

Manual Upper Body Massage

Shoulder Massage:
Select the intensity and speed you require.

Shiatsu-Massage:
You can choose between 2 modes for this massage. In addition, you can choose the intensity and speed of the massage which you would like. You can also select the distance between the massage rollers in order to find the perfect setting for you.

Kneading Massage:
Select the intensity and speed you require..

Tap Massage:
Select one of the two programs available and choose the intensity and speed you require. Here you can also adjust the distance between the massage rollers.

Kneading and Tap Massage:
Select the intensity and speed you require

3D Massage:
Select one of the four programs available and choose the intensity and speed you require.

ENG

Setting the Speed:
This option is available in all automatic programs.

Setting the Distance Between Massage Rollers:
This option is only available for tap and shiatsu massages.

Back Stretch Massage:
Apart from in the shoulder massage program, this massage can be added in all other manual programs..

Point Massage

Partial Massage

Full-Body Massage

Setting the Position of the Massage Rollers:
You can choose these settings with both the partial and the point massages::

Massage rollers move further up

Massage rollers move further down

Additional Manual Functions

Intensity of Back Massage
You can regulate the intensity of the back massage (upper body massage) using the “Plus” and “Minus” keys.

Roller foot massage:
Using the “sole roller” key you can add a foot massage and choose the intensity from 3 different levels.

Seat Heater:
The “heater” key switches on the heating function for the back area on and off.

Air Cushion Massages

Lower Body Massage
The control key turns the entire lower body area cushion massage on and off

I

Intensity of the Air Cushion Massage
Here the intensity of the air cushion massage in the feet, upper thigh and buttock areas can be regulated.

Air Cushion - Legs
Use the Quick Selection Key to switch off all the air cushions in the leg areas (leg massage units)

Air Cushion – Arms
Here it is possible to regulate the intensity of the air cushion massage in the arms.

Adjustment of the Seat and Lying Functions

Changing the Lying Position:
The complete chair (leg unit and back rest) will move into the lying position when you press this key. Press the key once for “half-recline” position and press it again a second time to bring the chair into “zero gravity” position.

Adjusting the Leg Unit:
With this key you can control the leg unit (up and down).

Adjusting the Back Rest:
With this key you can control the back rest (up and down)..

Step by Step Instructions for Assembling the Arm Rests
For assembly, lower the chair into the lying position. Please check before starting the assembly that none of the air hoses or cables are damaged. There is one more air hose on the left side than on the right. This is correct. Assembly is very easy as can be seen in the steps shown below. The arm rest is fixed simply using two Allen screws.
It is much easier to have a second person to help you with the assembly.

1) Take the cable from the inside of the chair through the steel frame and out to the outside. Connect the appropriate cables/hoses on the arm rest to those coming out of the chair. Press the compressed air hose firmly onto the connecting piece. Push the cable/hose back into the chair as far as it will go, before/whilst bringing the arm rest into position.

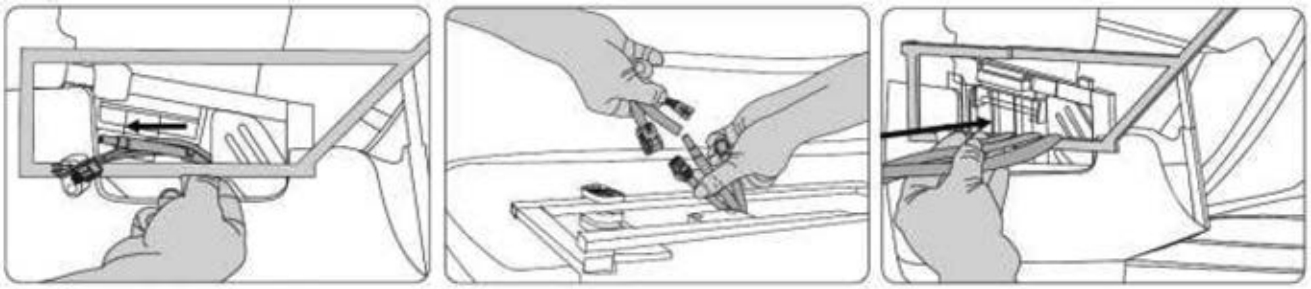

2) Using the illustrations identify the steel frame on the chair and the four clips on the arm rest. Place the clips on the steel frame as follows. The clips should be clipped onto the frame as follows. Starting with the front clip, push it from the front onto the steel frame. If it does not clip on immediately, you can apply some “gentle force” on the arm rest by hitting it gently with the palm of your hand. The top and bottom clips will snap on easily by putting some light pressure from above onto the steel frame.

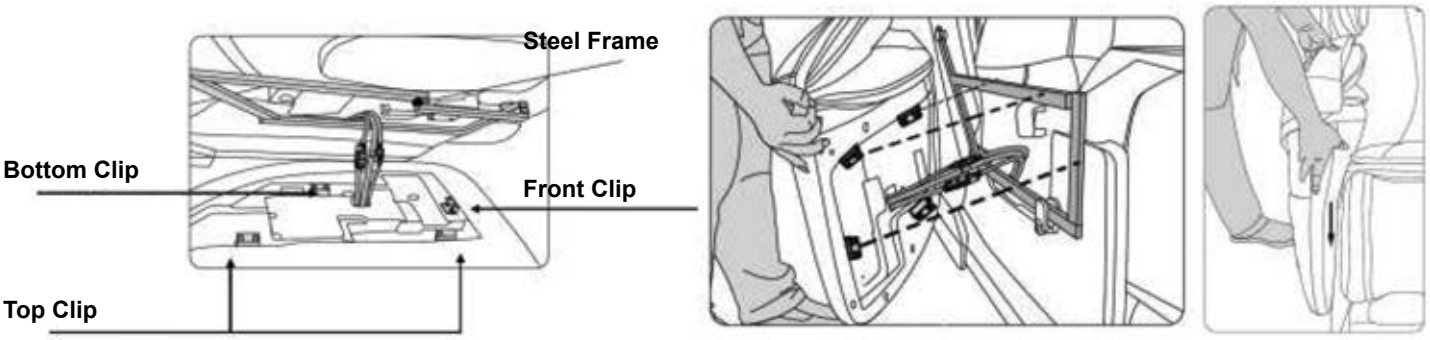

ENG

3) The armrest is fixed in position using only two screws. Insert and tighten the first Allen screw at the back between the seat cushion and the backrest. The second screw should be inserted and tightened at the front, between the seat cushion and the leg unit.

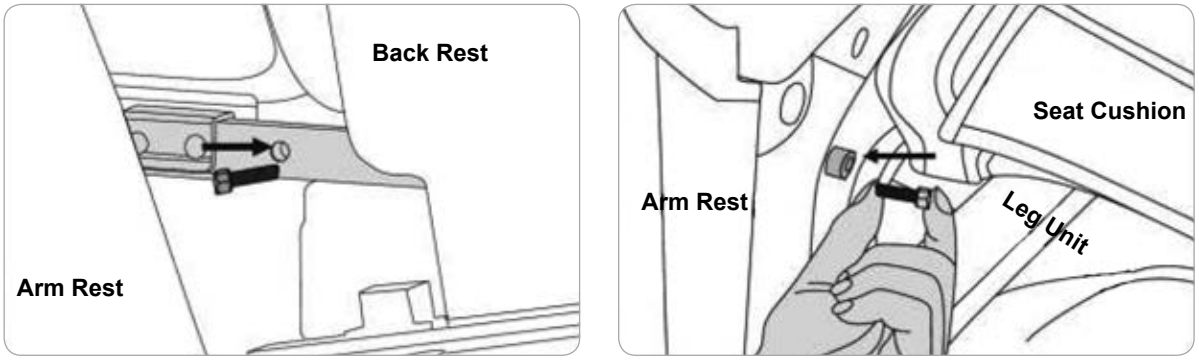

Setting up your Massage Chair:

Please note the safety warnings in this manual regarding where to locate the device. Make sure that you do not place the device directly onto floor surfaces such as laminate or parquet. With these types of floors, please lay down a carpet or a protection mat under the chair to avoid pressure marks on the flooring.

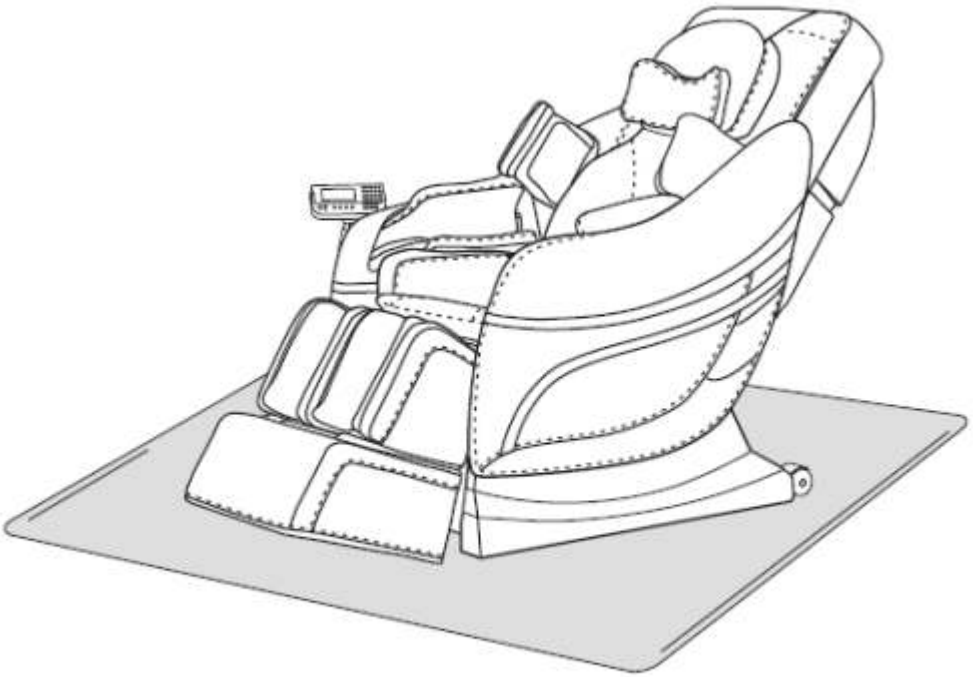

Transporting your Massage Chair

Please remember to remove the electrical plug from the socket before transport!

To roll the chair please make sure that all cables and tubes are kept at enough distance away from the floor. Tip the chair backwards with the back rest until the point of gravity of the chair is directly above the transport rollers. Now it is possible to push the chair on the rollers easily.

.

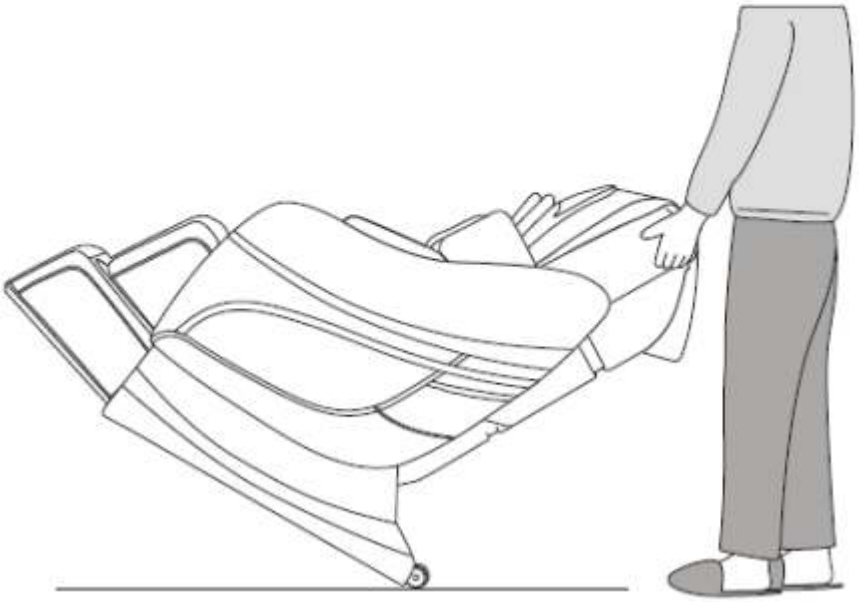

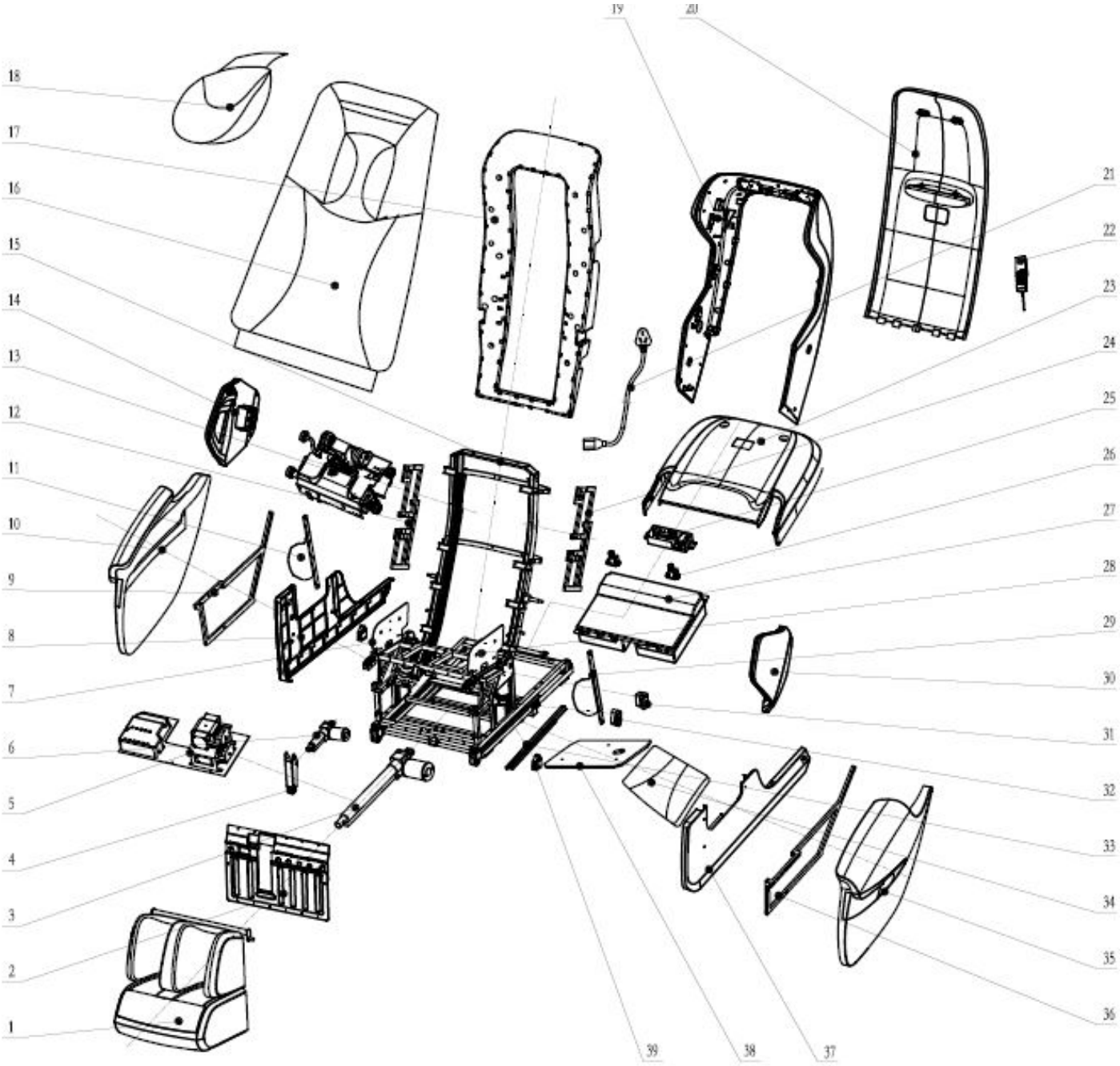
1
2
3
4
5
6
7
8
9
10
11
12
13
14
15
16
17
18
19
20
21
22
23
24
25
26
27
28
29
30
31
32
33
34
35
36
37
38
39

ENG

Spare Parts List

Part	Description
1	Foot massage component
2	Front cover component
3	Back rest cylinder
4	Foot rest pushing arm
5	Air pump valve component
6	Foot rest cylinder
7	Seat side airbag
8	Seat frame side cover component (right)
9	Arm rest steel component
10	Right arm rest
11	Connecting component (right)
12	Space capsule base install component (right)
13	3D massage mechanism component
14	Upper arm component (right)
15	Steel frame
16	Back cushion
17	Back frame component
18	Head cushion
19	Space capsule component
20	Up back cover
21	Power wire
22	Remote control component
23	Seat frame back cover
24	Space capsule base install component (left)
25	Power drive component
26	Emergency stop component
27	Main drive component
28	Side airbag component (left)
29	Connecting component (left)
30	Upper arm component (left)
31	Armrest back limits
32	armrest forward guide component
33	450 slideway component
34	Seat cover
35	Left arm rest
36	Arm rest steel component
37	Seat side cover component
38	Seat frame board component
39	Arm rest slipper component

ENG

For MAXXUS® Support Team to help you as quickly as possible with service, we will require certain information about your fitness device and about you. To find the exact spare parts required, we will need the product name, date of purchase and serial number.

If necessary, please fill out completely the Service Contract form attached to this User Manual and send it to us by post or you are welcome to use our online form "Service Contract" which you will find under the "Service" section at www.maxxus.com

Areas of Application & Warranty Periods

Depending on the model, fitness devices from MAXXUS® are suitable for use in different areas. Find the appropriate area of use for your fitness device from the "Technical Data" in this User Manual.

Home Use:
Exclusively for private use
Warranty Period: 2 Years

Semi-Professional Use:
Use under instruction in hotels, physiotherapy practices, etc.
Use in a fitness studio or similar establishment is hereby excluded!
Warranty Period: 1 Year

Professional Use:
Use in a fitness studio or similar establishment under supervision by trained personnel.
Warranty Period: 1 Year
Use of your training device in an area which is not suitable for your device will cause immediate expiry of its guarantee and cancel your right to claim warranty!
Sole private use and warranty period of 2 years assumes that the purchase invoice is made out to the end user.

Proof of Purchase and Serial Number
To claim your right to service works within the warranty period we will in each case require proof of purchase. Keep your proof or purchase or purchase invoice in a safe place and in warranty cases send us a copy together with your Service Contract. This will ensure that we can process the service work as quickly as possible. So that we can identify which model version requires to be serviced correctly, we will require; Product Name, Serial Number and Date of Purchase.

Terms and Conditions of Warranty:

The warranty period for your training device starts on the date of purchase and applies solely to products which were purchased directly from the MAXXUS Group GmbH & Co KG or one of the MAXXUS Group GmbH & Co KG direct and authorised distribution partners.

The warranty covers defects caused by production or material faults and only apply to devices purchased in Germany. The warranty does not apply to damages or defects caused by culpable improper use, negligent or purposeful destruction, lack or failure to carry out maintenance and/or cleaning measures, force majeure, operational causes and to normal wear and tear, damages caused by penetration of liquids, damage caused by repairs or modifications made with spare parts from a different supplier. The warranty also does not apply for damages due to faulty assembly or damages which occur because of faulty assembly. Certain component parts will wear out during use or from normal wear and tear. This includes for example:

- Ball bearings
- Bearing bushings
- Bearings
- Drive belts
- Rollers
- Switches and push-buttons
- Treadmill belts (bands)
- Treadmill decks (running deck)

Signs of wear and tear on wearing parts are not items covered under the warranty.

For assistance with warranty service or warranty repair enquiries for devices not in Germany, please contact our Service Department at MAXXUS Group GmbH & Co KGM by sending an Email to: service@maxxus.de and we will be happy to help.

Service Outside the Warranty and Ordering Spare Parts

The MAXXUS® Service Team is happy to be of assistance to help solve any problems with faults which may arise following expiry of the warranty period, or in cases of defects arising which are not covered by the warranty.
In this case please contact us by email direct to:

service@maxxus.de

Orders for Spare Parts or Worn Parts should be sent along with information on the Product Name, spare part description and number and the quantity required to:

spareparts@maxxus.de

Please be informed that additional fixing materials such as screws, bolts, washers etc are not included in the scope of delivery for individual spare parts. These should be ordered separately.

*Version: June/2016

MAXXUS

Device Details

Product Name: **MX 20.0Z**

Product Group: **Massage Chair**

Serial Number: _____

Invoice Number: _____

Date of Purchase: _____

Where Purchased: _____

Accessories: _____

_____

Type of Use:

☐ Private Use

☐ Commercial Use

Personal Details

Company: _____

Contact Person: _____

First Name: _____

Second Name: _____

Street: _____

House Number: _____

Post Code / Town/City: _____

Country: _____

E-Mail: _____

Tel.No.: _____

Fax. No.*: _____

Mobile No.*: _____

* The fields marked with an asterisk are optional. The remaining fields are mandatory fields that must be completed..

Fault Description
Please enter a short description of the error as precisely as possible below:
(For example, when, where and how does the error occur? Frequency, after which period, at what Use, etc ....).

ENG

☐ A copy of the proof of purchase / invoice / receipt is attached.

☐ I accept the General Terms and Conditions of MAXXUS® Group GmbH & Co. KG.

I hereby instruct the company MAXXUS® Group GmbH & Co. KG to repair the above defects. In Warranty cases I will not be charged for the cost. The costs for repairs which are excluded from liability for defects in quality will be charged to me and must be settled immediately. In cases of repairs carried out on site, our staff are entitled to collect payment. This agreement is confirmed with here with my signature.

_____	_____	_____
Date	Location	Signature

Please be aware that contracts can only be processed if this form has been completed in full. Be sure to attach a copy of your purchase invoice. Send the fully completed Repairs Contract / Notification of Damage Claim to:

Post*: Maxxus Group GmbH & Co KG, Service Department, Zeppelinstr. 2, 64331 Weiterstadt
Fax: +49 (0) 6151 39735 400
E-Mail**: customerservice@maxxus.de

* Please stamp with sufficient postage – letters which are not sent postage paid will unfortunately not be accepted.
** Submission by E-Mail is only possible as a scanned document with original signature.

You are welcome to use our online form “Service Contract” which you will find under the “Service” section at www.maxxus.com

Maxxus Group GmbH & Co. KG
Zeppelinstr. 2
DE-64331 Weiterstadt
Germany
E-Mail: info@maxxus.com
www.maxxus.com