INSTALLATION & OPERATING MANUAL

MAXXUS

Massage Chair

MX 7.1

ENG

Index

Index	**2**
Safety & Maintenance	**3 – 5**
Description of Parts	**6**
Operation	**7 – 9**
Setting Up & Transporting the Device	**10**
Exploded Drawing	**11 – 12**
Parts List	**13**
Warranty	**14**
Service Contract	**15**

© 2019 MAXXUS Group GmbH & Co. KG
All rights reserved / All rights reserved

This publication may not be reproduced, stored in a retrieval system, or transmitted in whole or in part, in any form or by any means, electronic, mechanical, photocopying, recording, or otherwise without the prior written permission of Maxxus Group GmbH & Co. KG.

Errors, colour and technical modification subject to change, reproduction as well as electronic duplication only with written permission of MAXXUS Group GmbH & Co. KG.

1. Important Safety Instructions ⚠

- Keep children away from all moving parts of the chair.
- Connect the device to an earthed electrical socket
- Remove the electrical plug from the socket after use and before cleaning to avoid personal injury or damage to the device.
- Only use the chair as instructed in this operating instruction manual.
- Do not use any additional parts or components which are not included in this scope of delivery.
- Never use this device outside or on a balcony or terrace.
- Please read the operating instructions carefully before using the device.
- All types of use which are not described in this manual are prohibited
- Es empfiehlt sich, das Gerät nicht länger als 20 Minuten pro Massage zu nutzen.
- Please do **not** use this device if:
  - the leather is torn or damaged.
  - any of the covers are broken or damaged
  - the heating or ventilation vent is covered up or blocked.
  - If you have consumed excessive alcohol or you are feeling sick or unwell
- Wait for at least an hour after a big meal before using the device.
- Do not fall asleep on the chair during a massage.
- To avoid injury, do not turn the massage function up too high.

2. Installation Location ⚠

- Please do not use the device:
- In rooms with high temperatures and/or in rooms with a high humidity.
- When the room temperature varies rapidly or quickly
- In very dusty rooms
- In any location where there is not enough space for the necessary ventilation.

3. Personal Conditions ⚠

- If you suffer from any of the following ailments or illnesses, we advise against using this device:
  - Osteoporosis
  - Heart problems or heart disease
  - If you have a pacemaker or any other electronic medical device
  - High temperature or fever
  - Any open wounds
  - Skin diseases
  - During pregnancy or menstruation
- If your doctor has ordered you to rest, we also advise not to use this device.
- Children under the age of 14 years should not be allowed to use this chair without supervision.
- Do not use this device if your body is wet or damp.

4. General Safety Instructions ⚠

- Check the electrical supply voltage before turning the device on for the first time.
- Do not remove the electrical plug from the socket with wet hands
- Keep water or any other liquids away and avoid them getting into the device
- Do not damage any cables and do not exchange any circuits on this product.
- Do not use wet or damp cloths or similar to clean electrical components like switches or electrical plugs.
- Keep away from the device during a power cut to avoid being injured when the electricity goes back on.
- Please stop using the device immediately if any kind of malfunction occurs.
- Also stop using the device if you start to feel unwell.
- If the electrical cable is damaged, remove the plug from the socket and contact the supplier or another qualified electrical technician for a replacement.
- Children must be supervised when they are near the unit.
- The device is not suitable for use by persons with diminished physical, sensory or mental abilities. It is also not suitable to be used by inexperienced or unknowledgeable persons (eg children) without supervision.

5. Service and Maintenance ⚠

- The maintenance of the device may only be carried out by qualified personnel. Please do not disassemble or try to maintain the device yourself. Exceptions are only small maintenance works or repairs under the instruction of a technician of the supplier.
- Do not forget to turn off the power to the device at the mains after use.
- Do not use the device if the electrical plug is loose in the socket.
- If the chair is not to be used for a long period of time, roll up the cable and store it in a dry and dust-free place.
- Do not expose the device to high temperatures or long periods of direct sunlight.
- If the electrical cable is damaged, remove the plug from the socket and contact the supplier or another qualified electrical technician for a replacement
- Please clean the device with a dry cloth. Do not ever use thinner, mineral spirits, or alcohol for cleaning.
- All mechanical components of the chair are designed so that no special maintenance is required.
- Avoid contact with sharp objects with the chair.
- Please do not push or pull the chair over uneven ground. The chair must always be lifted to be transported.
- Please use the device with enough time intervals between each application. Do not have the device in constant use.

6. Commonly Alleged Malfunctions ⚠

- It is normal for the electronic motors to make buzzing noises during operation.
- If the control unit does not operate, please check first if the electrical plug is correctly plugged into the socket and it is turned on at the mains.
- The device will switch off automatically when the set program has come to an end.
- If the device runs too long, the chair temperature protection system will switch off automatically.
- If the device switches off automatically, it should be possible to switch it on again for use after approximately 30 minutes

Description of Parts

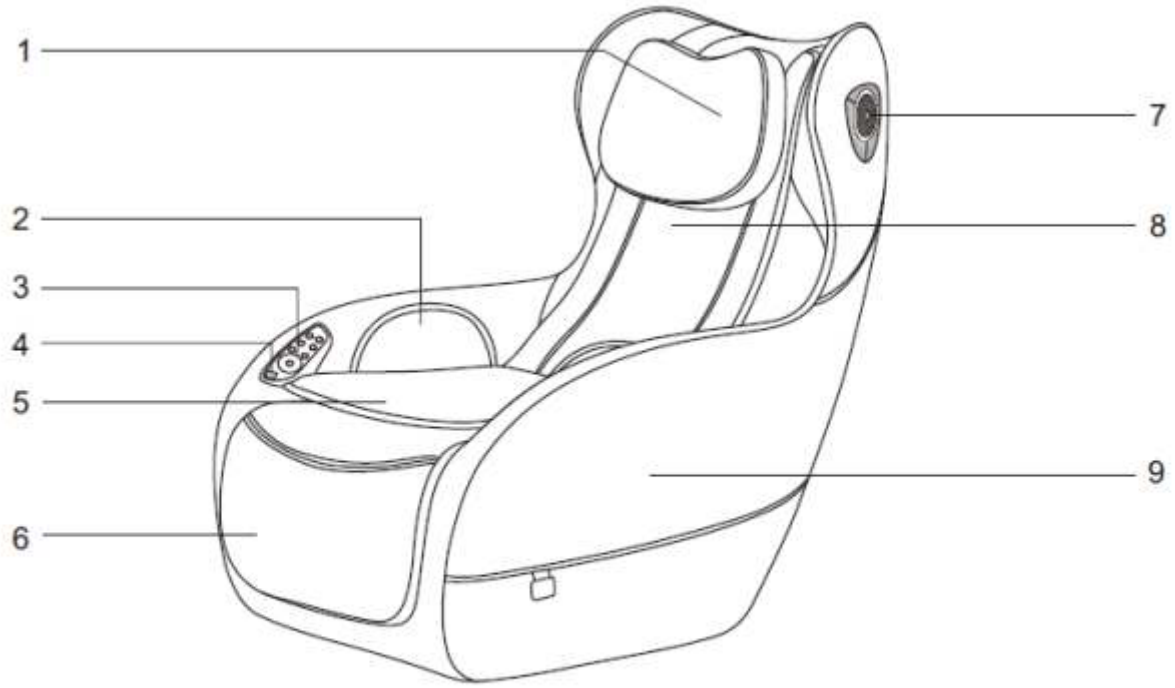

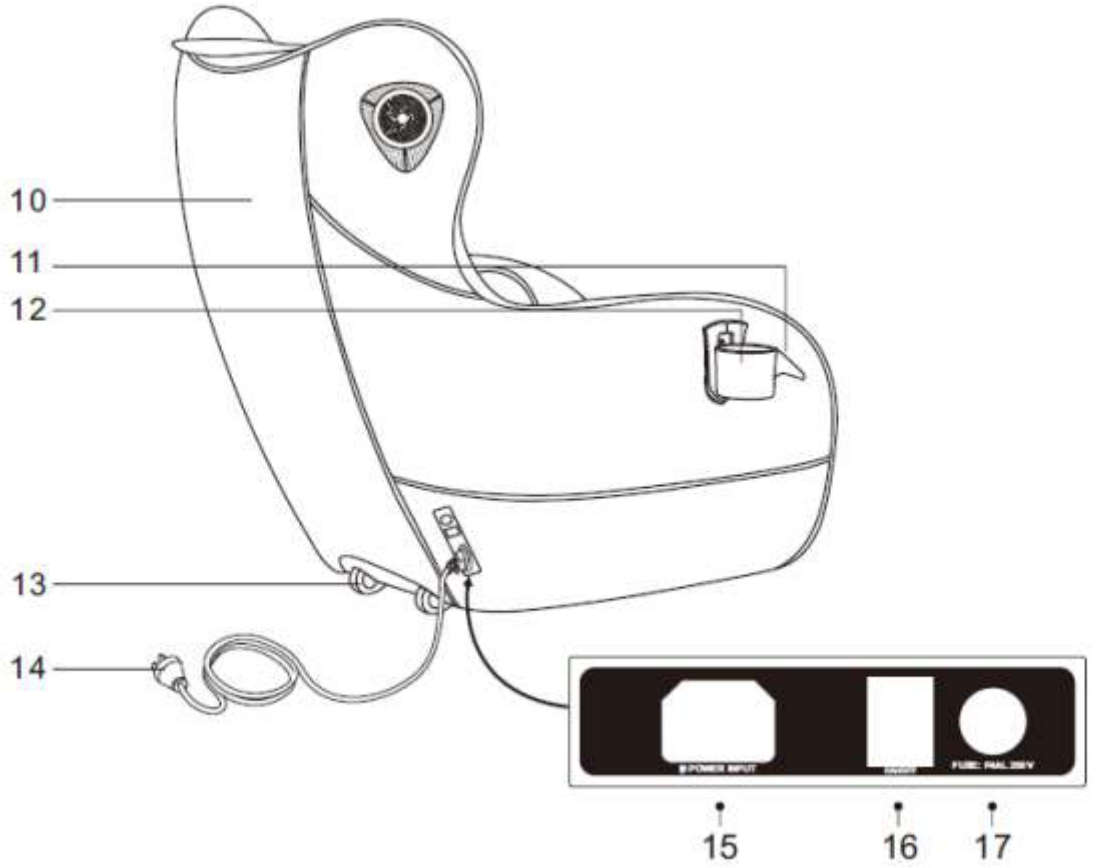

1. Headrests
2. Air Cushion
3. Control Panel
4. USB Charging Point
5. Seat Cushion
6. Leg Rest
7. Bluetooth speaker
8. Back Rest
9. Side Panel
10. Back Cover
11. Cup Holder
12. Cup Holder
13. Transport Rollers
14. Mains Cable
15. Mains Connection
16. Power Switch
17. Fuse

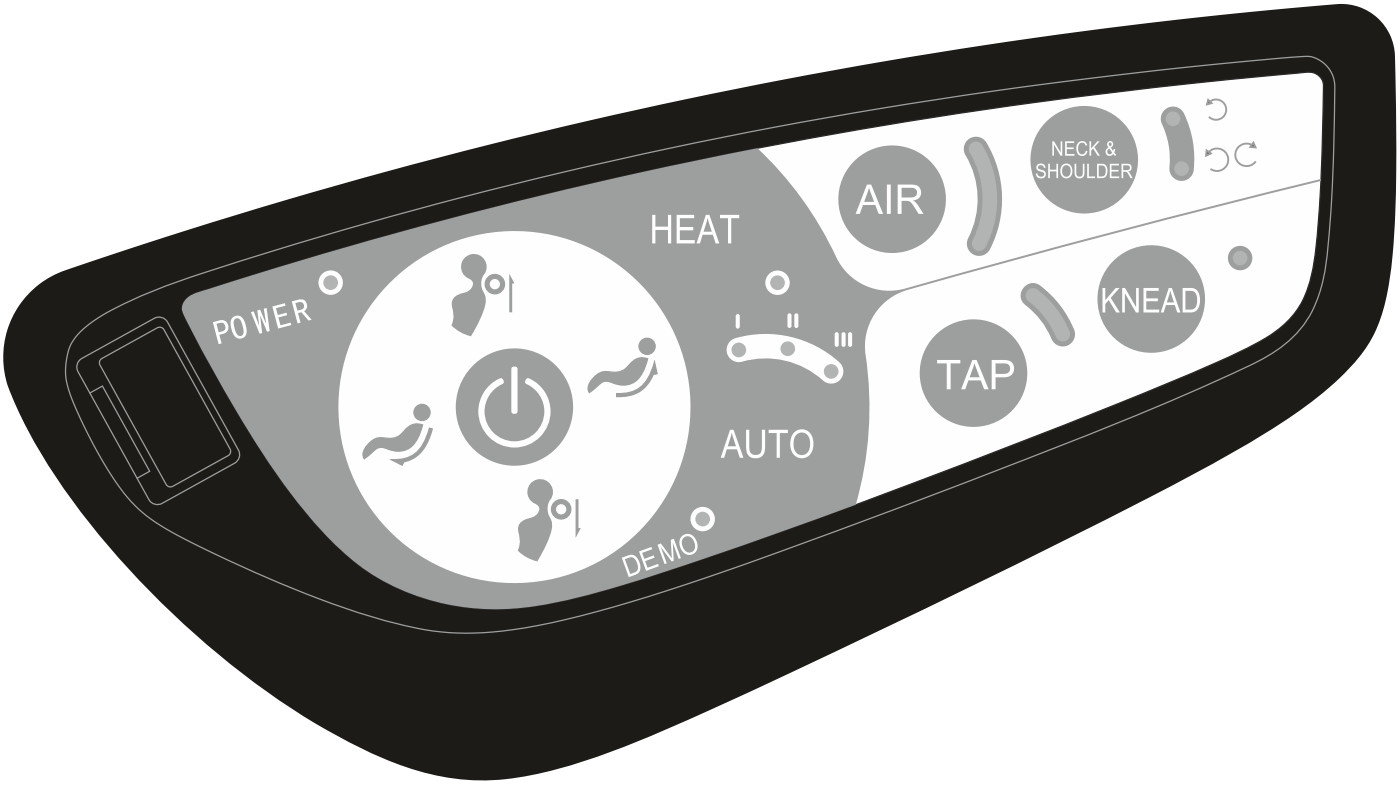

1. Switch on

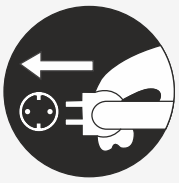

Connect the power cable to the armchair and a power outlet.

Switch on the massage chair with the ON / OFF button.

ENG

2. Start Massage

1 Press the red button to start the massage.
2 The AUTO I program starts automatically. You can select other programs.

A) AUTO Massage Mode

Button	Symbol	Massage Features	Display
Auto massage	Auto	Auto I: Full body massage	**AUTO I**
		Auto II: Neck & Back Massage	**AUTO II**
		Auto III: Waist, Buttocks and Thighs	**AUTO III**
		Demo: 5-minute trial massage	**DEMO**

B) Manual Massage

Button	Symbol	Massage Features	Display
Function	KNEAD	Press this button to start or end the kneading massage	**KNEAD**
	TAP	Press this button to start or end the tapping massage 3 levels optional: easy, medium and intensive	**TAP**
Adjustment of the massage position		Massage moves up	
		Massage moves down	

C) Neck and Shoulder Massage

Button	Symbol	Massage Features	Display
Function	Neck & shoulder	2-way & 1-way Kneading massage	**Neck & shoulder**
	Heating	Button for switching the heating function on and off	**HEAT**
Adjustment of the massage position		Massage rollers move up	
		Massage rollers move down	

D) Air Pressure Massage in the Seat Area

Button	Symbol	Massage Features	Display
Air pressure	AIR	Air pressure massage in the seat area in 3 intensity levels: easy, medium, intense	**AIR**

3. Bluetooth speakers

1. Turn on the massage chair using the ON / OFF button.
2. Turn on Bluetooth device search on your SmartPhone or tablet PC
3. Once the device “IMCM-0066” * is displayed, connect.
4. Enter the password “0000” or “1234” and confirm.
5. You can play the music from your smartphone or tablet PC.

* Note: The device name may differ for each model, “IMCM” is always displayed, but the number may change, e.g.”-0061”

4. Assembly of the Cup Holder

After you have unpacked the armchair and set it up, proceed as follows:

Fig1: The position for the cup holder.
Fig2: Attach the cup holder.
Fig3: Fix the cup holder with the enclosed screws.
Fig4: Check that the cup holder is secure.

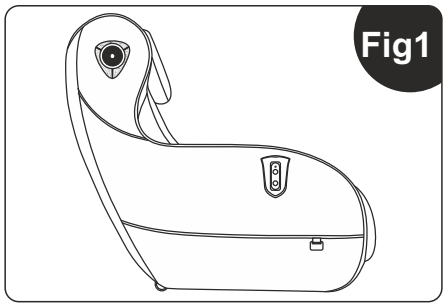

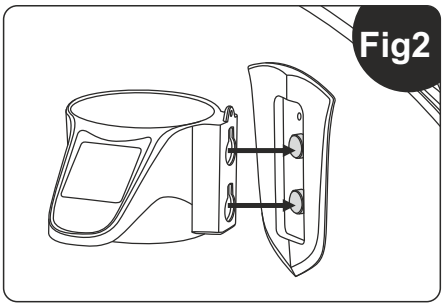

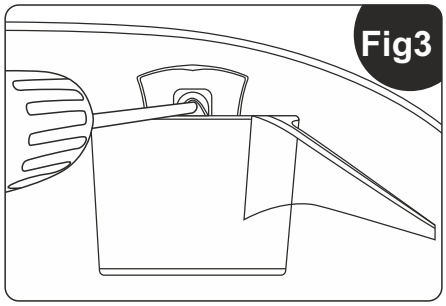

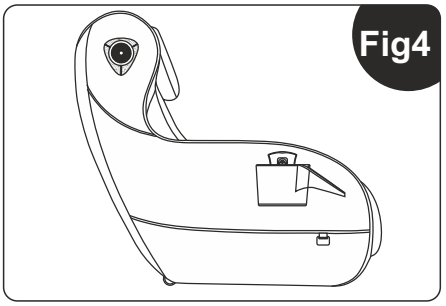

ENG

If the massage is too intense for you, you can reduce the intensity by using the extra cushion.

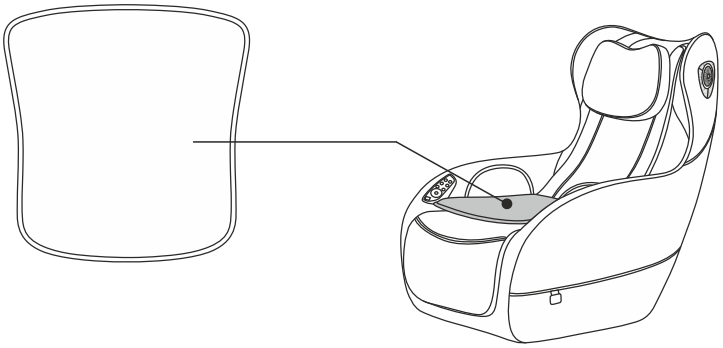

Setting up your massage chair:

Please observe the warnings in this manual with regard to the installation site. Please take care not to place the chair directly on surfaces such as laminate or parquet, place carpet or a protective mat under the chair to avoid pressure points.

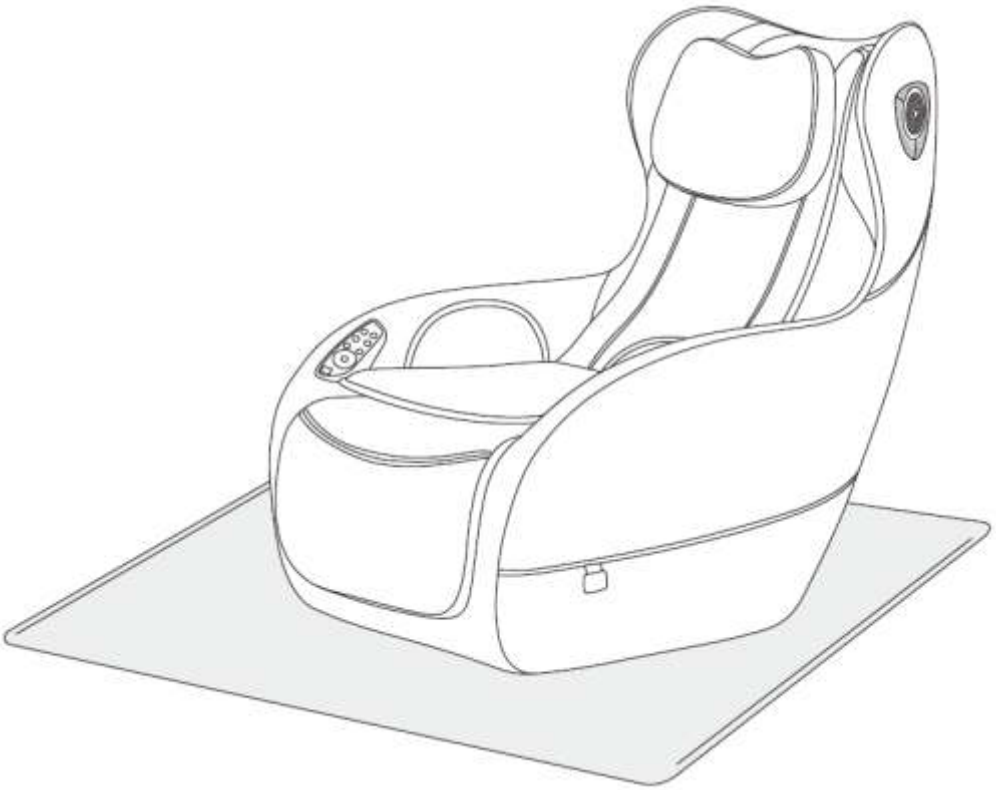

Move your massage chair

Before moving, please unplug the power plug!
To move the chair, first make sure that all cables are sufficiently clear of the floor. Tilt the chair backwards until the centre of gravity of the chair lies directly over the transport rollers so you can move the chair easily.

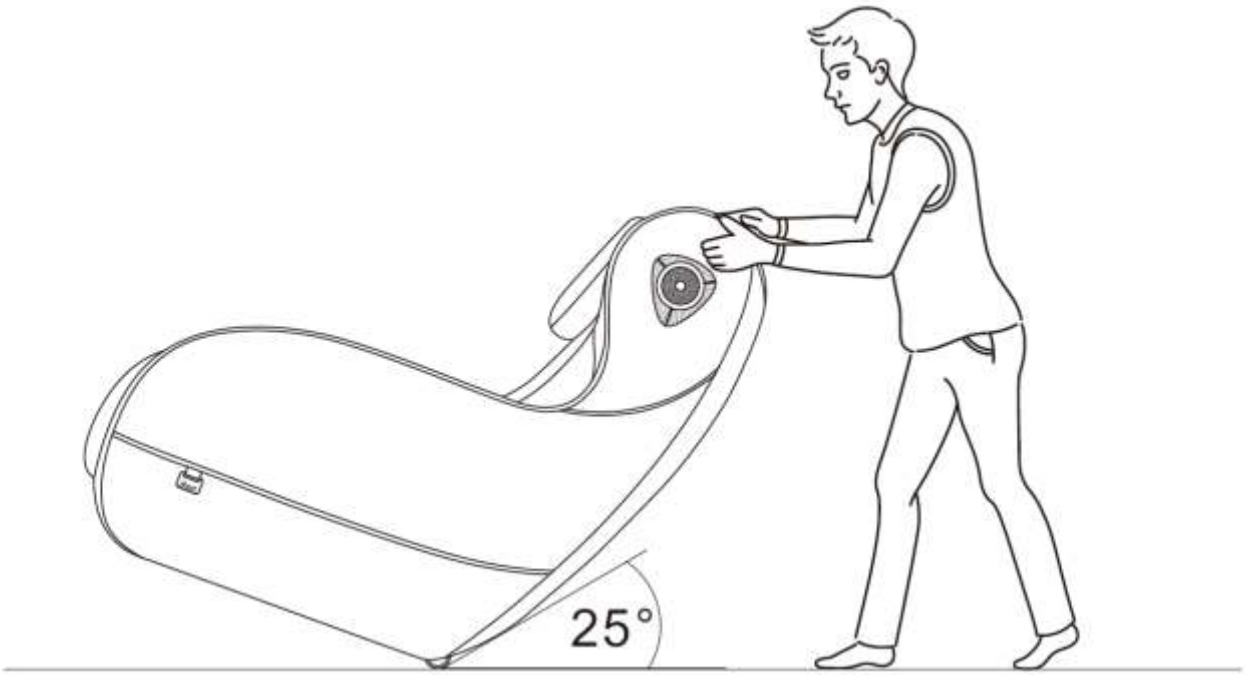

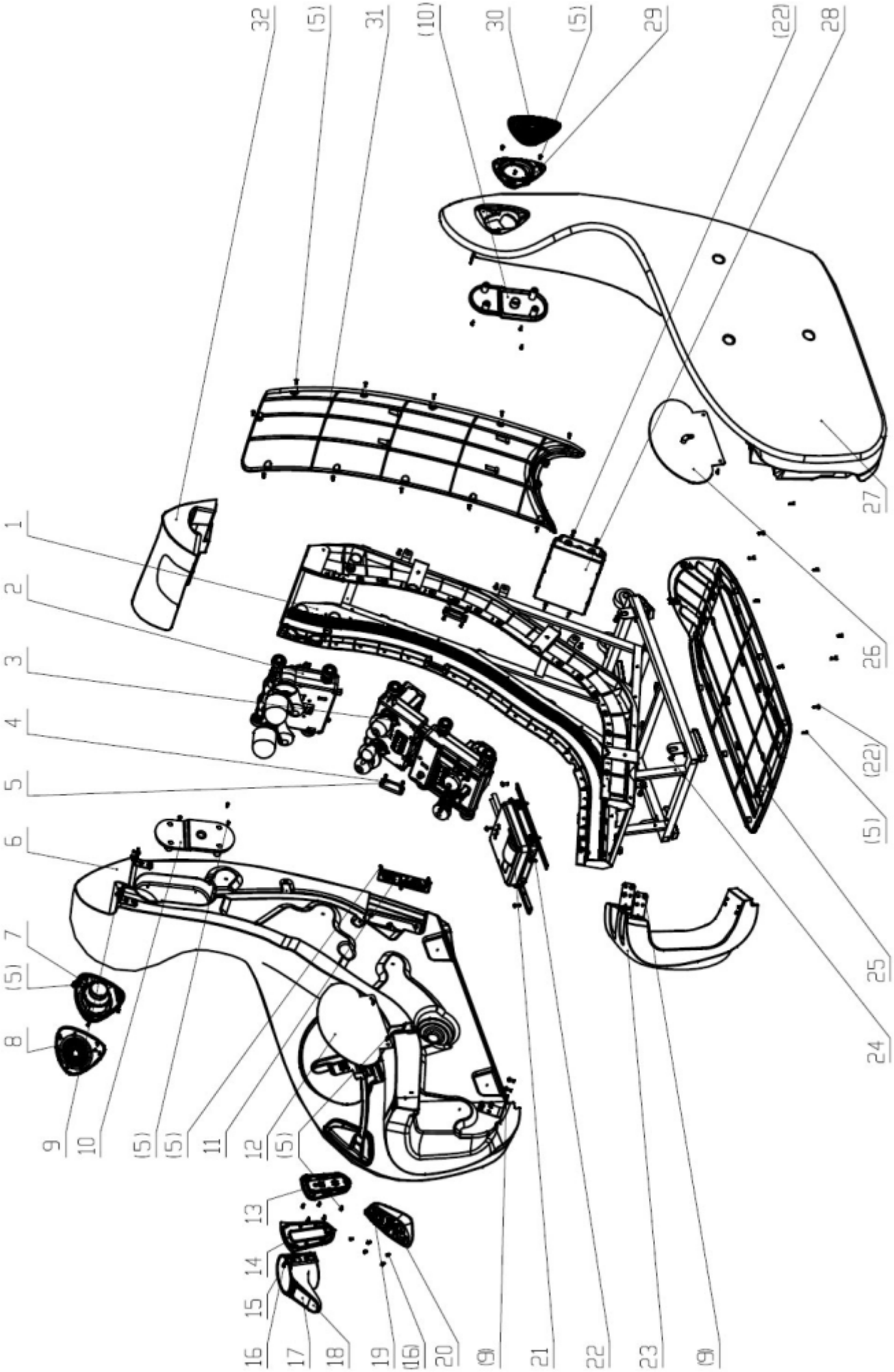
32
(5)
31
(10)
30
(5)
29
(22)
28
27
26
(22)
(5)
25
24
1
2
3
4
5
6
7
(5)
8
9
10
(5)
(5)
11
12
(5)
13
14
15
16
17
18
19
(16)
20
(9)
21
22
23
(9)

ENG

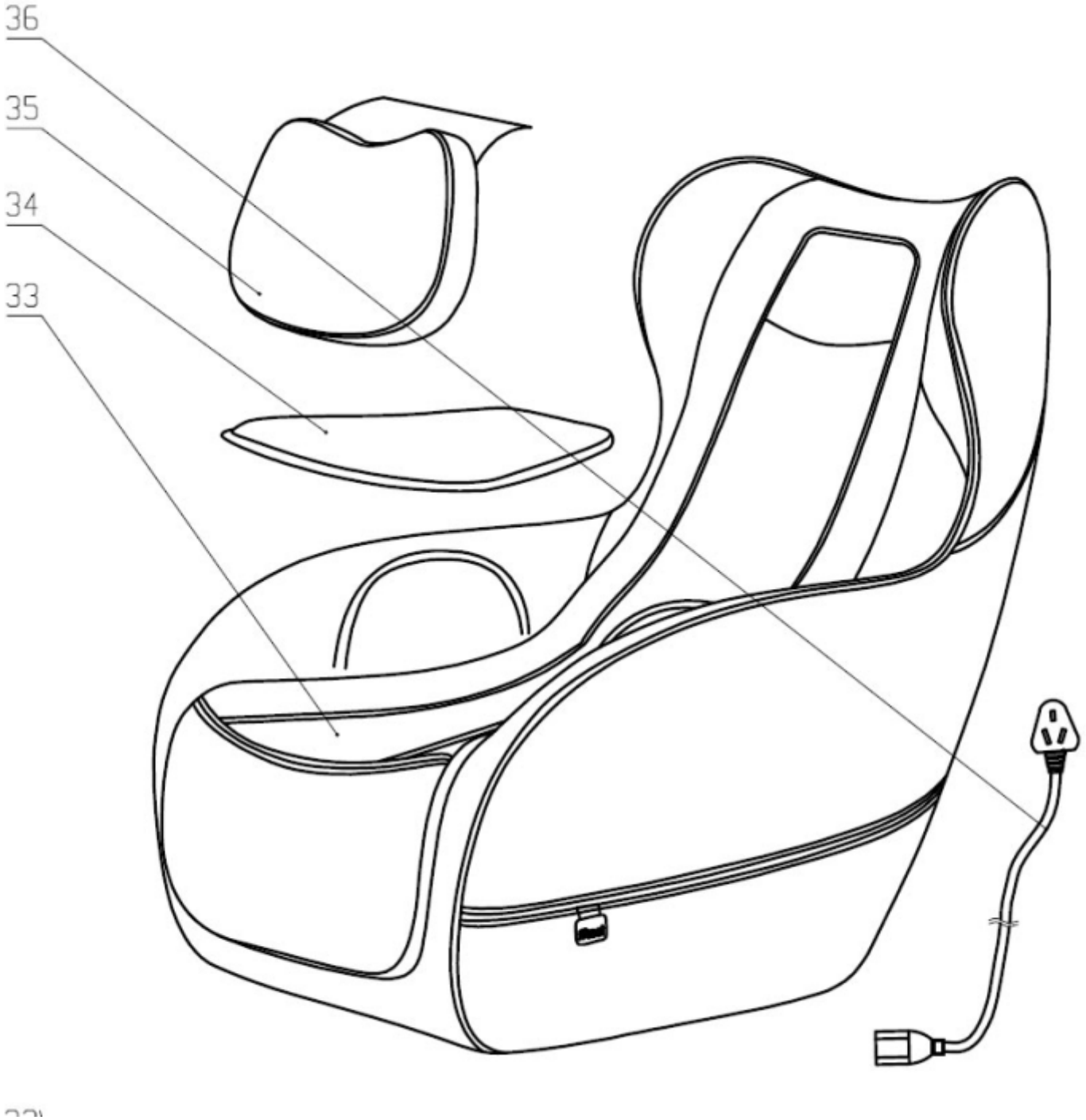
36
35
34
33

Parts List

Part Number	Description
1	Frame components
2	Neck movement
3	Double robot
4	Plastic Rail Patch
5	Pan head tapping screw
6	Right armrest assembly
7	Speaker inner cover left components
8	Speaker cover left
9	Cross recessed pan head screws
10	Speaker cover
1	Power switch components
12	Buttock Airbag
13	Cup holder
14	Cup holder support frame trim
15	Cup holder
16	Pan head tapping screw
17	QR code sticker
18	Cup holder sticker
19	Hand control panel components
20	Hand control panel sticker
21	Air pump silencer box components
22	Cross recessed pan head tapping screws
23	Front rail components
24	Cross recessed pan head screws
25	Chassis
26	buttock Airbag
27	Left armres components
28	Drive box components
29	Speaker inner cover left assembly
30	Speaker cover left
31	Rear cover
32	Upper rail
33	Leather case components
34	Cushion components
35	Head components
36	power cable

ENG

For MAXXUS® Support Team to help you as quickly as possible with service, we will require certain information about your fitness device and about you. To find the exact spare parts required, we will need the product name, date of purchase and serial number.
If necessary, please fill out completely the Repairs Contract/Damage Report form attached to this User Manual and send it to us by post or by fax.

Areas of Application & Warranty Periods

Depending on the model, fitness devices from MAXXUS® are suitable for use in different areas. Find the appropriate area of use for your fitness device from the “Technical Data” in this User Manual.

Home Use:
Exclusively for private use
Warranty Period: 2 Years

Semi-Professional Use:
Use under instruction in hotels, physiotherapy practices, etc.
Use in a fitness studio or similar establishment is hereby excluded!
Warranty Period: 1 Year

Professional Use:
Use in a fitness studio or similar establishment under supervision by trained personnel.
Warranty Period: 1 Year
Use of your training device in an area which is not suitable for your device will cause immediate expiry of its guarantee and cancel your right to claim warranty!
Sole private use and warranty period of 2 years assumes that the purchase invoice is made out to the end user.

Proof of Purchase and Serial Number
To claim your right to service works within the warranty period we will in each case require proof of purchase. Keep your proof or purchase or purchase invoice in a safe place and in warranty cases send us a copy together with your Repairs Contract/Damage Notification. This will ensure that we can process the service work as quickly as possible. So that we can identify which model version requires to be serviced correctly, we will require; Product Name, Serial Number and Date of Purchase.

Terms and Conditions of Warranty:

The warranty period for your training device starts on the date of purchase and applies solely to products which were purchased directly from the MAXXUS Group GmbH & Co KG or one of the MAXXUS Group GmbH & Co KG direct and authorised distribution partners.

The warranty covers defects caused by production or material faults and only apply to devices purchased in Germany. The warranty does not apply to damages or defects caused by culpable improper use, negligent or purposeful destruction, lack or failure to carry out maintenance and/or cleaning measures, force majeure, operational causes and to normal wear and tear, damages caused by penetration of liquids, damage caused by repairs or modifications made with spare parts from a different supplier. The warranty also does not apply for damages due to faulty assembly or damages which occur because of faulty assembly. Certain component parts will wear out during use or from normal wear and tear. This includes for example:
▪ Ball bearings ▪ Bearing bushings ▪ Bearings ▪ Drive belts ▪ Rollers
▪ Switches and push-buttons ▪ Treadmill belts (bands) ▪ Treadmill decks (running deck)
Signs of wear and tear on wearing parts are not items covered under the warranty.

For assistance with warranty service or warranty repair enquiries for devices not in Germany, please contact our Service Department at MAXXUS Group GmbH & Co KGM by sending an Email to: service@maxxus.de and we will be happy to help.

Service Outside the Warranty and Ordering Spare Parts

The MAXXUS® Service Team is happy to be of assistance to help solve any problems with faults which may arise following expiry of the warranty period, or in cases of defects arising which are not covered by the warranty.
In this case please contact us by email direct to:

service@maxxus.de

Orders for Spare Parts or Worn Parts should be sent along with information on the Product Name, spare part description and number and the quantity required to:

spareparts@maxxus.de

Please be informed that additional fixing materials such as screws, bolts, washers etc are not included in the scope of delivery for individual spare parts. These should be ordered separately.

*Version: June/2016

MAXXUS

Device Details

Product Name: **MX 7.1**

Product Group: **Massage Chair**

Serial Number: _____

Invoice Number: _____

Date of Purchase: _____

Where Purchased: _____

Accessories: _____

_____

Type of Use:

☐ Private Use

☐ Commercial Use

Personal Details

Company: _____

Contact Person: _____

First Name: _____

Second Name: _____

Street: _____

House Number: _____

Post Code / Town/City: _____

Country: _____

E-Mail: _____

Tel.No.: _____

Fax. No.*: _____

Mobile No.*: _____

* The fields marked with an asterisk are optional. The remaining fields are mandatory fields that must be completed.

Fault Description

Please enter a short description of the error as precisely as possible below:
(For example, when, where and how does the error occur? Frequency, after which period, at what Use, etc ....)

ENG

☐ A copy of the proof of purchase / invoice / receipt is attached.

☐ I accept the General Terms and Conditions of MAXXUS® Group GmbH & Co. KG.

I hereby instruct the company MAXXUS® Group GmbH & Co. KG to repair the above defects. In Warranty cases I will not be charged for the cost. The costs for repairs which are excluded from liability for defects in quality will be charged to me and must be settled immediately. In cases of repairs carried out on site, our staff are entitled to collect payment. This agreement is confirmed with here with my signature.

_____	_____	_____
Date	Location	Signature

Please be aware that contracts can only be processed if this form has been completed in full. Be sure to attach a copy of your purchase invoice. Send the fully completed Service Contract to:

Post*: Maxxus Group GmbH & Co KG, Service Department, Zeppelinstr. 2, 64331 Weiterstadt
Fax: +49 (0) 6151 39735 400
E-Mail**: customerservice@maxxus.de

* Please stamp with sufficient postage – letters which are not sent postage paid will unfortunately not be accepted.
** Submission by E-Mail is only possible as a scanned document with original signature.

You are welcome to use our online form “Service Contract” which you will find under the “Service” section at www.maxxus.com

Maxxus Group GmbH & Co. KG
Zeppelinstr. 2
D-64331 Weiterstadt
Germany
E-Mail: info@maxxus.de
www.maxxus.com